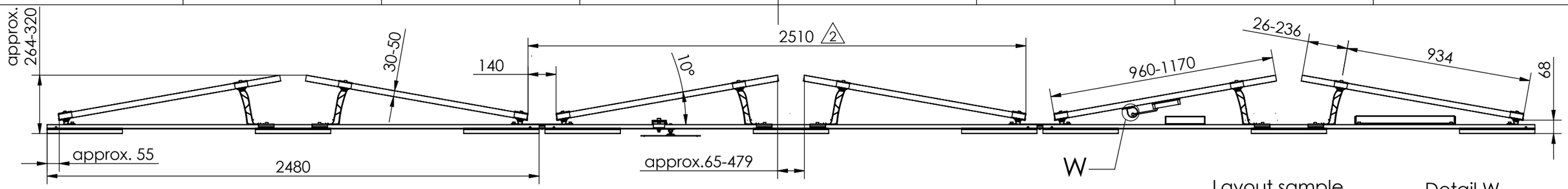

Plan view
1 : 50

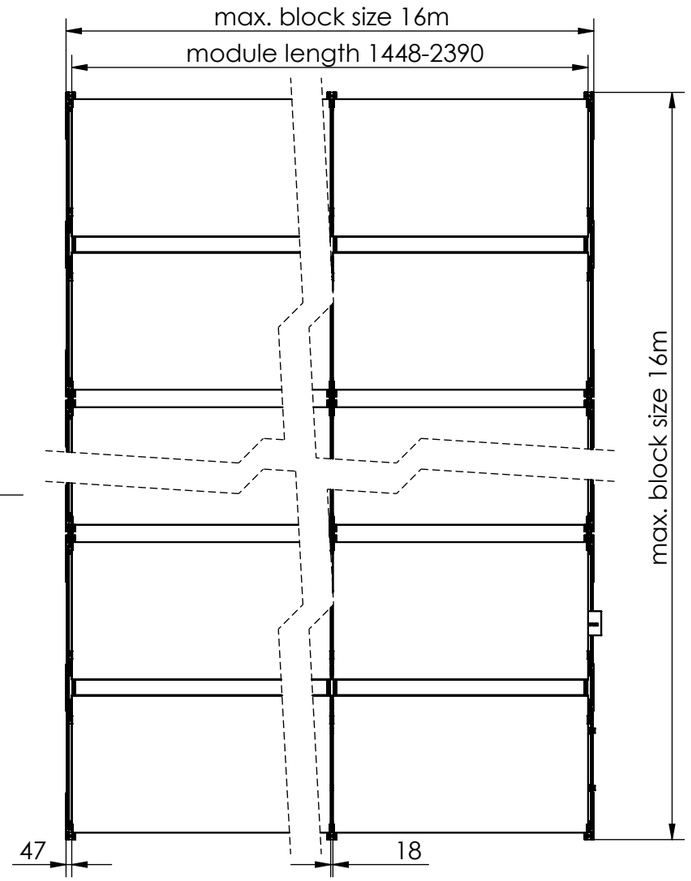

Detail Y
1 : 5

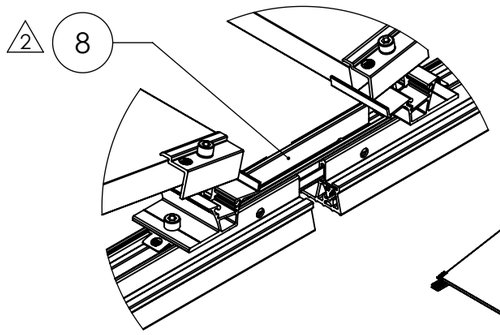

Layout sample
1 : 50

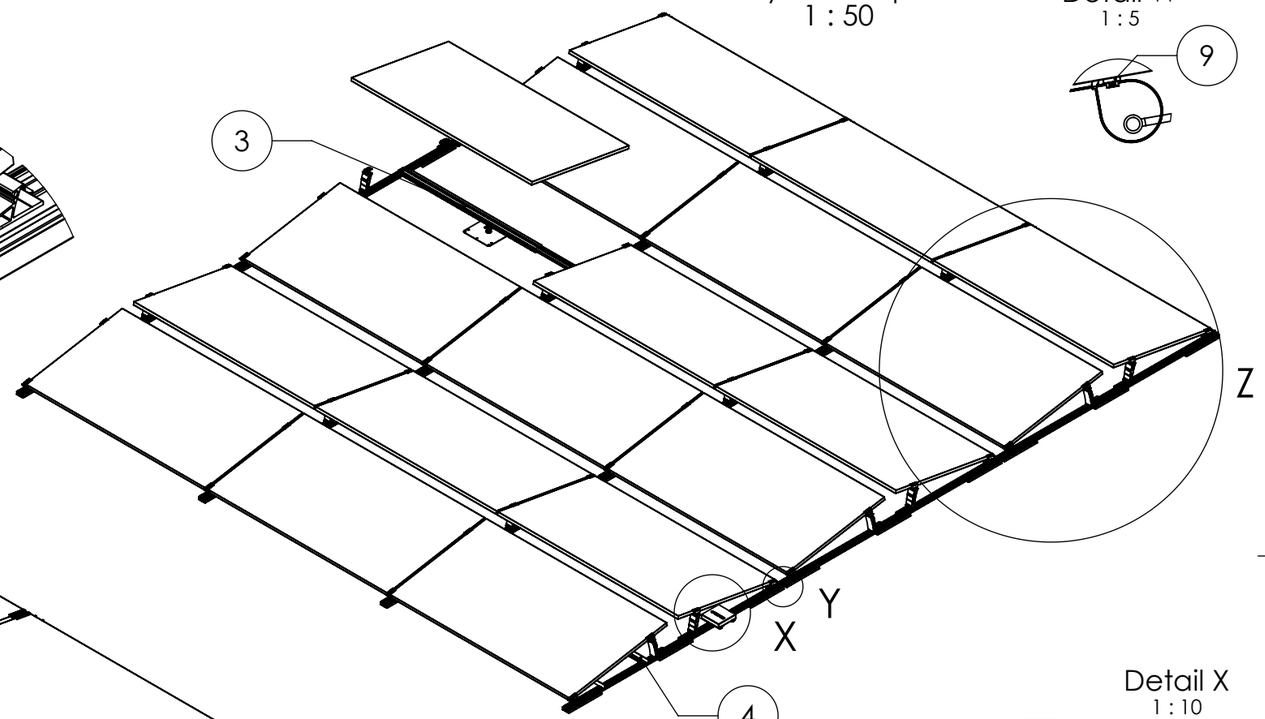

Detail W
1 : 5

Detail Z

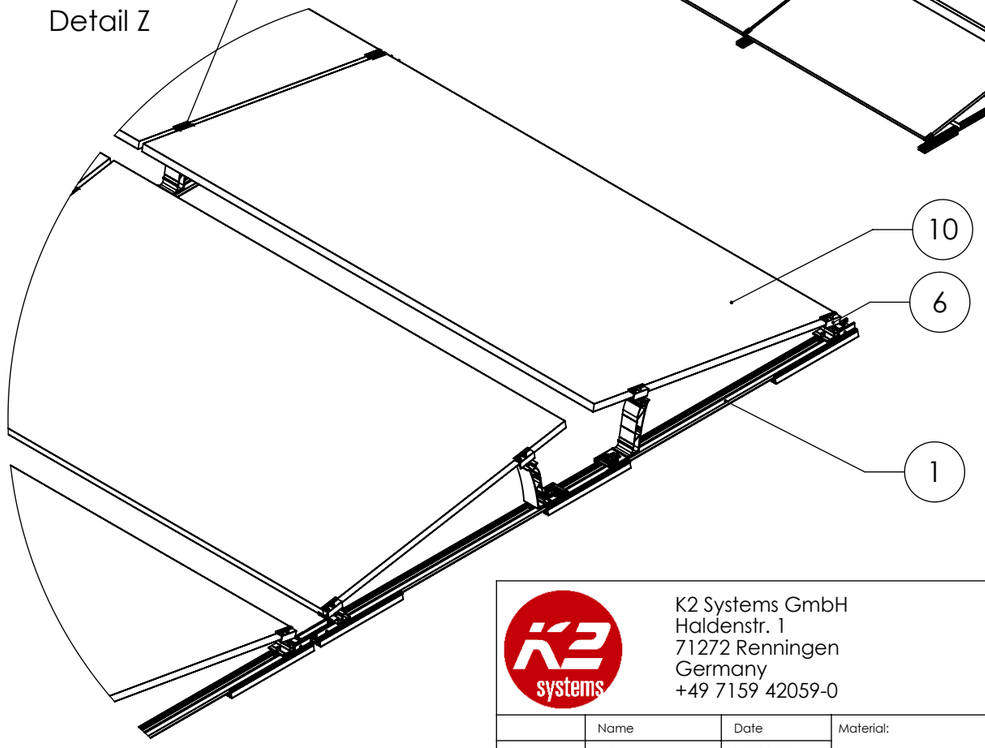

Detail X
1 : 10

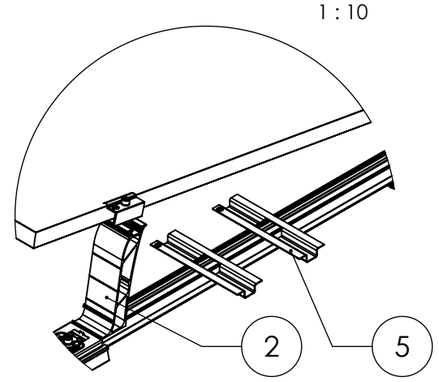

Pos.No.	Designation	Optional
1	D-Dome 6.10 Base Set	
2	Dome 6.10 Peak	
3	Dome FixPro L	
4	Dome Porter long	X
5	Dome SpeedPorter	X
6	DomeClamp EC Set 30-50	
7	DomeClamp MC Set 30-50	
8	Dome 6 XPress Connector Set 2	
9	Cable Manager PA66W	X
10	Modul	

K2 Systems GmbH
Haldenstr. 1
71272 Renningen
Germany
+49 7159 42059-0

Designation:

System Data Sheet D-Dome 6.10 Xpress 2

	Name	Date	Material:		Item no.:	Revision:	A3
Designed	M.Schuler	14.02.2024	-		E-00004273	02	All dimensions in mm
Approved	GWO	03.06.2026	Surface: -				
Last change	MAY	03.06.2026	Weight: ca. - g /pc	Scale: 1:20			Sheet 1 of 1

This drawing is the sole property of K2 Systems GmbH. It is protected by copyright and may only be copied, reproduced or distributed to a third party with explicit permission!