Connecting Strength

Assembly tip

Dome 6 Classic / Classic LS System
with PE plates or walkway slabs

Content

- **Tools overview** **3**

- **Additional components** **4**
  - · Assembly with PE Plates 4
  - · Assembly with concrete blocks / walkway slabs 4

- **Basic assembly** **4**

- **Thermal Separations** **5**
  - · S-Dome Classic 5
  - · D-Dome Classic 5
  - · S-Dome Classic LS 5
  - · D-Dome Classic LS 5

- **D-Dome 6** **6**
  - · Placement & assembly with PE plates 6
  - · Placement & assembly with walkway slabs 8

- **S-Dome 6** **10**
  - · Placement & assembly with PE plates 10
  - · Placement & assembly with walkway slabs 12

- **Notes** **13**

Quality tested - multiple certifications

K2 Systems stands for secure connections, highest quality and precision. Our customers and business partners have known that for a long time. Independent institutes have tested, confirmed and certified our capabilities and components.
Please find our quality and product certificates under:
k2-systems.com

Tools overview

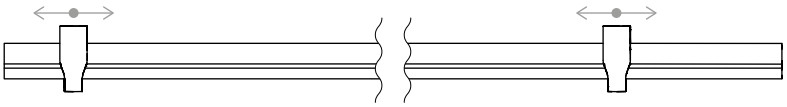

Dome Speed Spacer Large · 2004129
Distance template for module lengths

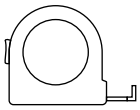

≥ 3.0 m

≥ 6.0 m

Digital Toolbox

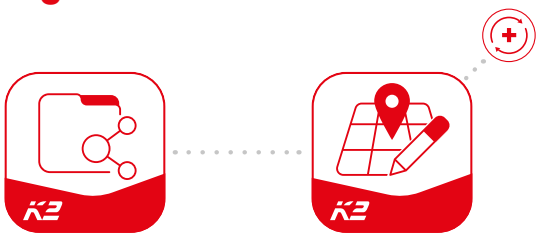

Do you already know our digital services? Use our K2 DocuApp now and record the first important data directly at the customer or project site. Simply transfer the data to our online planning software K2 Base. Here you can plan your project easily, safely and quickly. You receive a detailed project report with assembly plan and static report.
The K2+ interface enables seamless project data transfer to the planning tools of well-known inverter manufacturers or yield planning tools.

Get started and register now:

docuapp.k2-systems.com

base.k2-systems.com

Additional components

Assembly with PE Plates

1001572 / 2003389 / 2004143

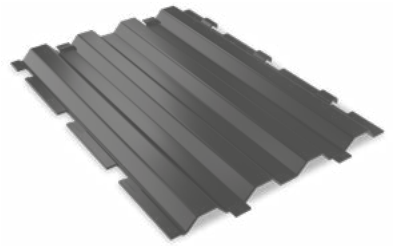

PE Plate 600 × 800 mm

! Please check whether additional building protection is necessary for the PE sheet.

1000212

Self-tapping screw with sealing washer

Assembly with concrete blocks / walkway slabs

2002570

Multi Monti - fastner 7.5 × 40 TX40

Basic assembly

For the assembly of the basic components, please refer to the assembly instructions for D-/S-Dome 6 Classic or Classic LS.

Additional ballasting of the system may be necessary. For this please refer to the steps "Ballasting options and specifications" in these assembly instructions.

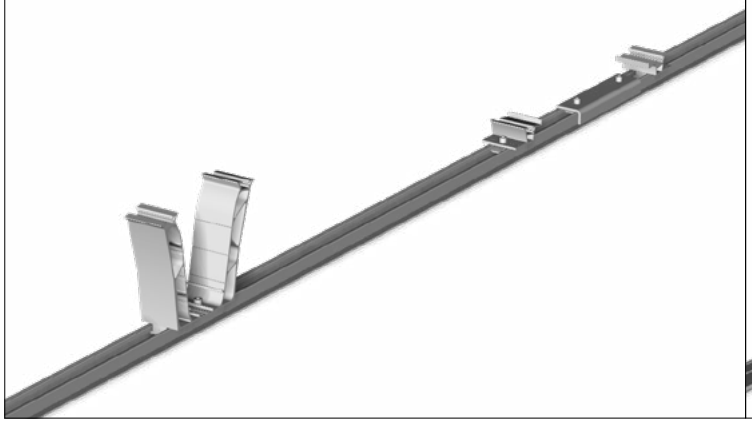

Thermal Separations

Direction	Classic		Classic LS	
	S-Dome [m]	D-Dome [m]	S-Dome [m]	D-Dome [m]
Vertical (base rail)	15	16	15	16
Horizontal (module row)	15	16	15	16

S-Dome Classic

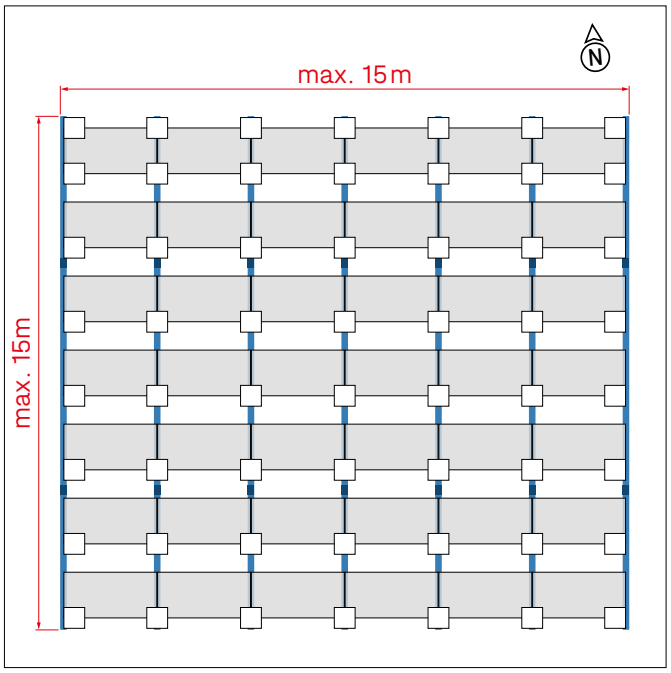

S-Dome Classic LS

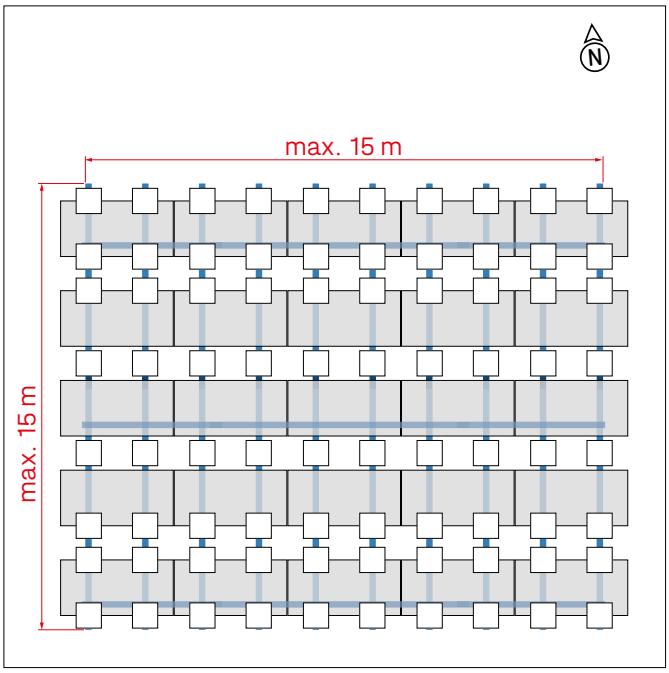

D-Dome Classic

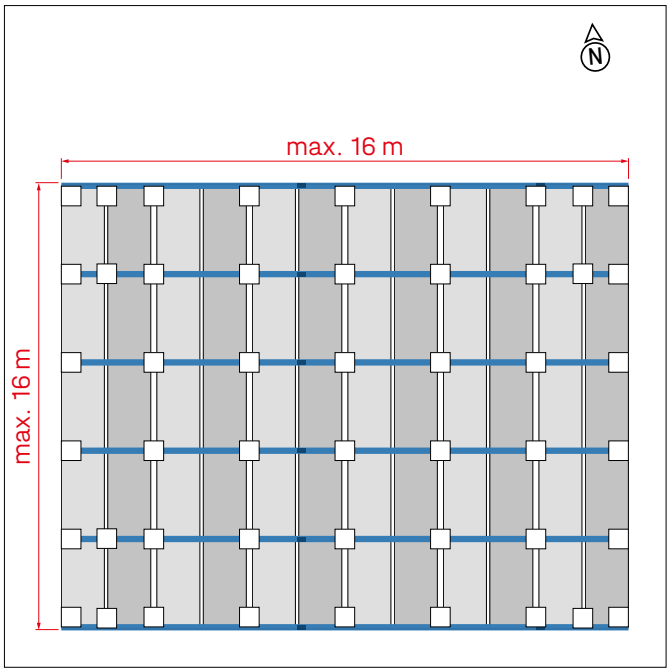

D-Dome Classic LS

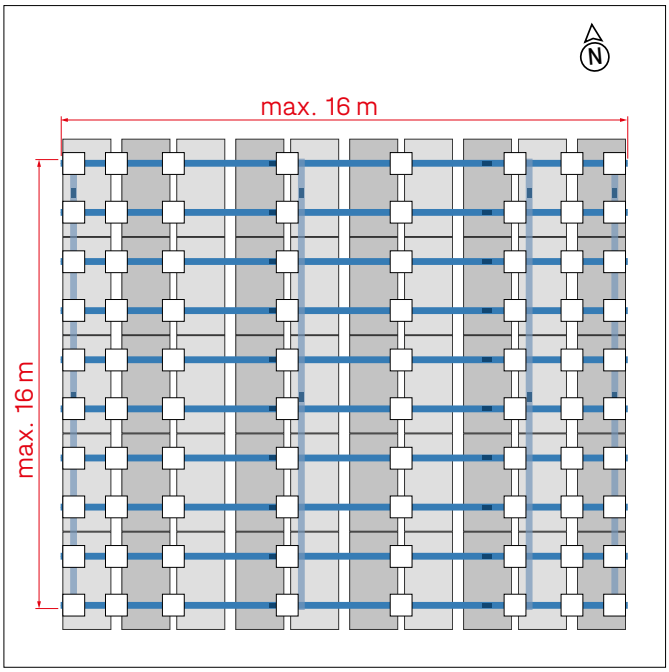

D-Dome 6

Placement & assembly with PE plates

1a Classic

! Remove fill for complete row of rails

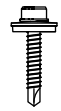

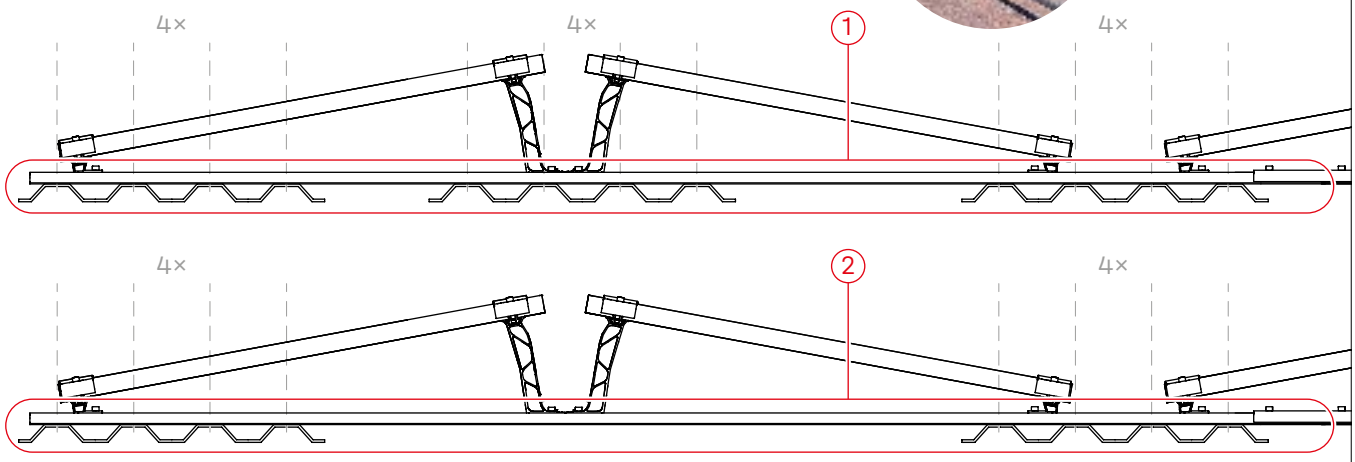

1b Classic LS

! Remove fill for complete row of rails

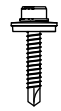

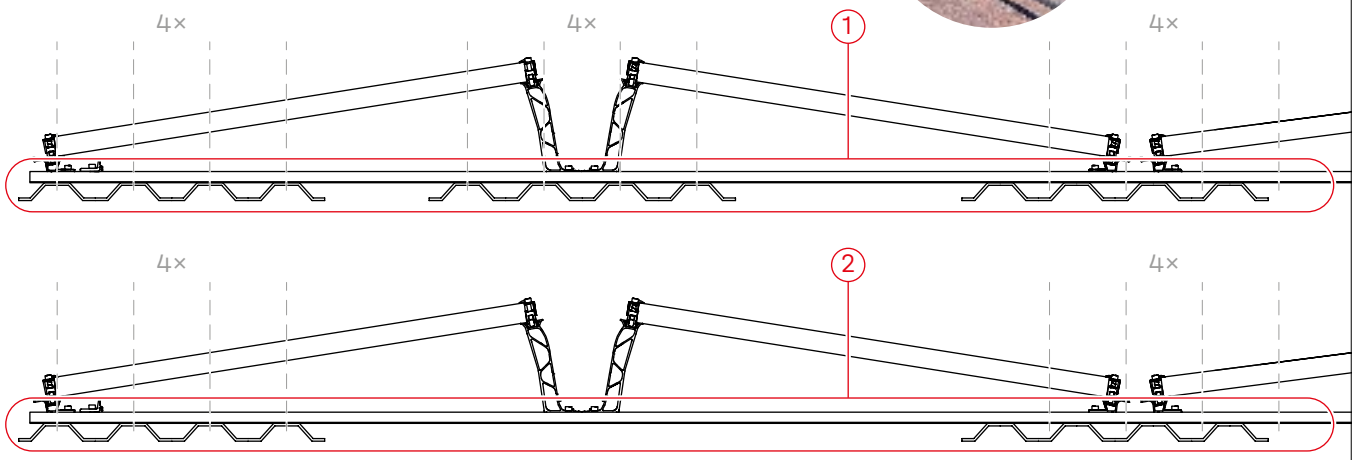

2a Classic

Place the PE plates according to the K2 Base installation plan.

! Additional ballast is necessary in some cases!

The gravel fill is applied to the PE plates again.

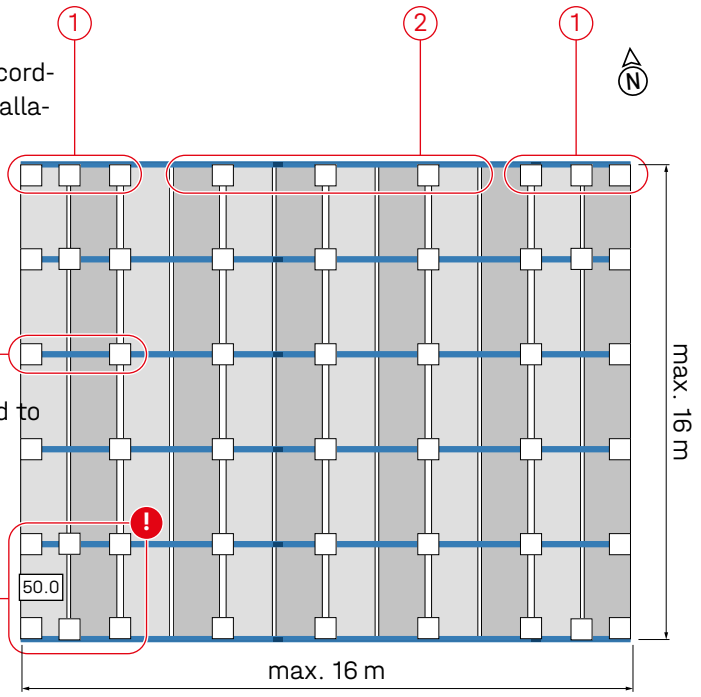

2b Classic LS

Place the PE plates according to the K2 Base installation plan.

! Additional ballast is necessary in some cases!

The gravel fill is applied to the PE plates again.

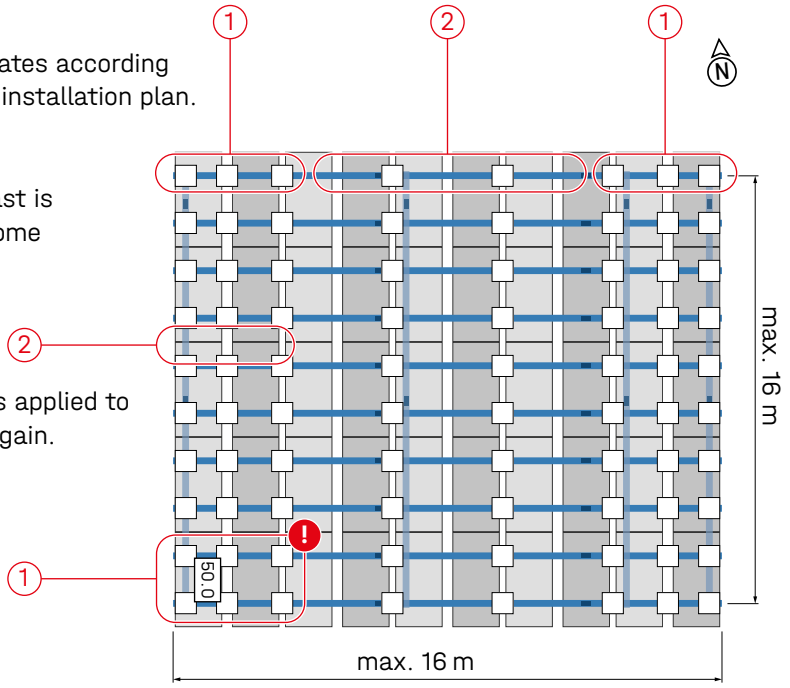

Placement & assembly with walkway slabs

1 Classic/Classic LS

A walkway slab is placed under each SD and Peak elevation and fixed with concrete anchors.
Pre-drilling for the concrete anchor is necessary.

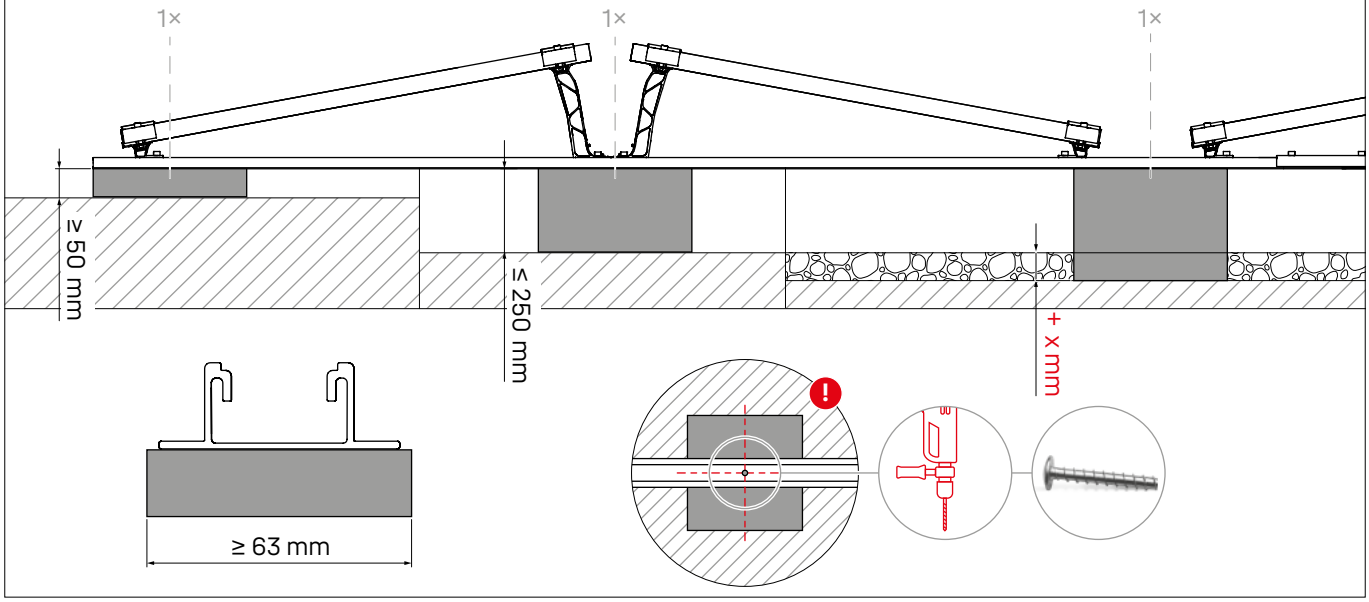

2

! Additional ballast is necessary in some cases!

Classic

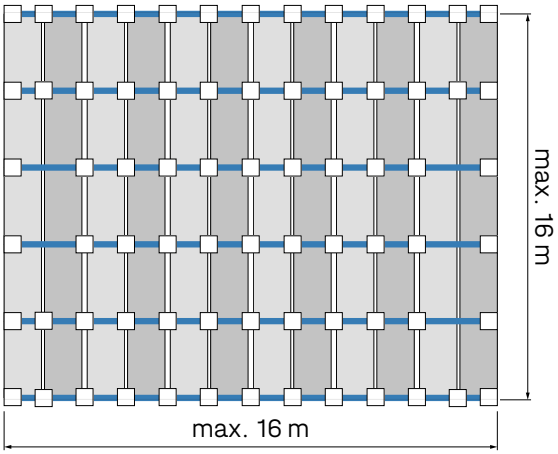

Classic LS

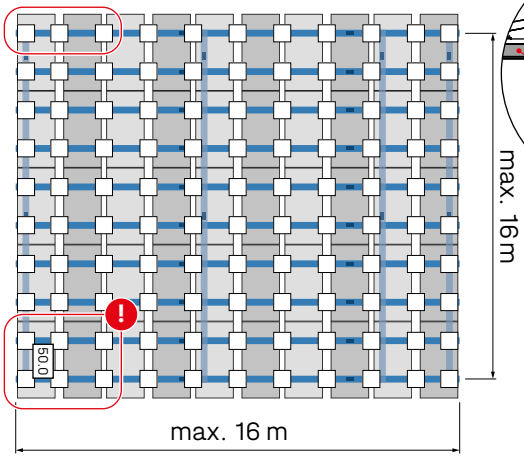

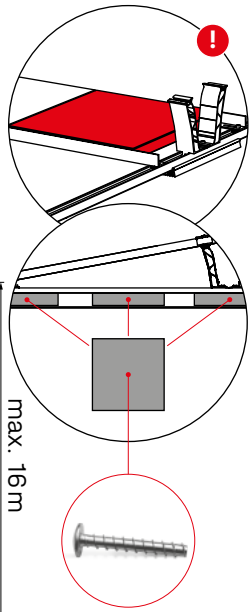

S-Dome 6

Placement & assembly with PE plates

1a Classic

! Remove fill for complete row of rails

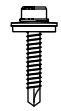

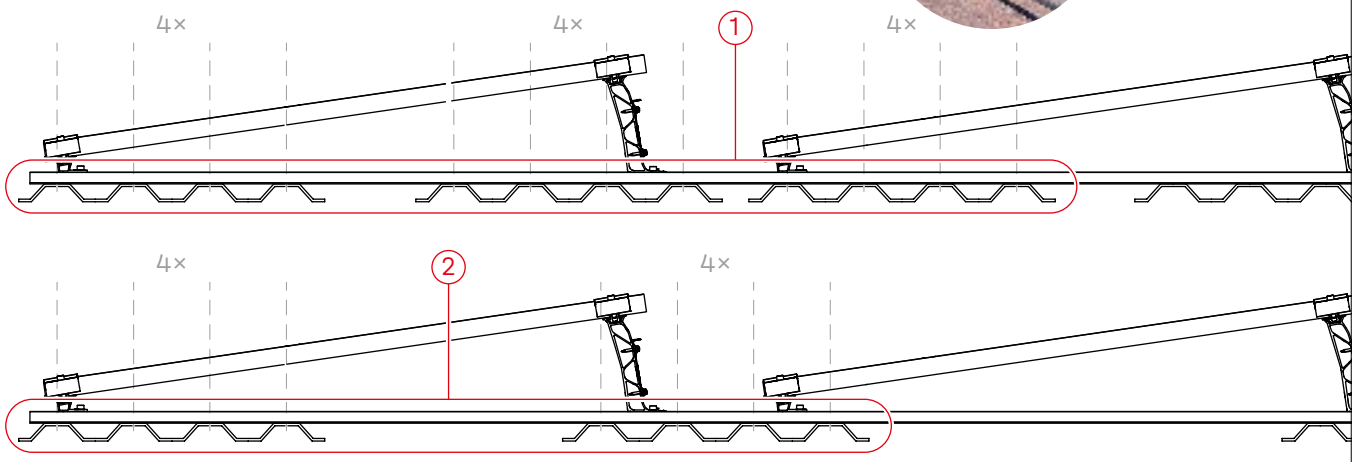

1b Classic LS

! Remove fill for complete row of rails

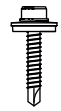

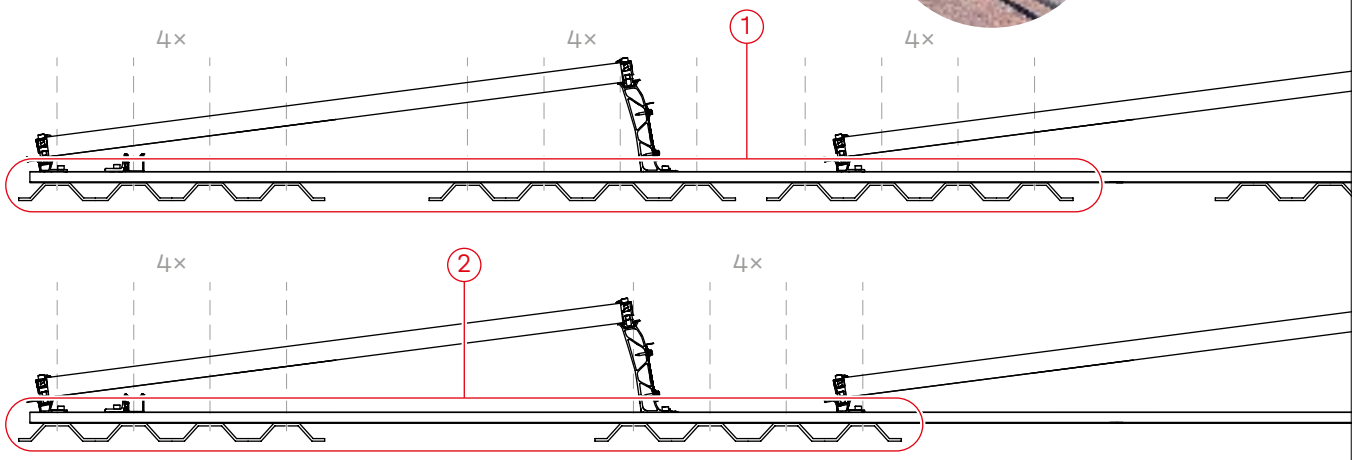

2a Classic

Place the PE plates according to the K2 Base installation plan.

! Additional ballast is necessary in some cases!

The gravel fill is applied to the PE plates again.

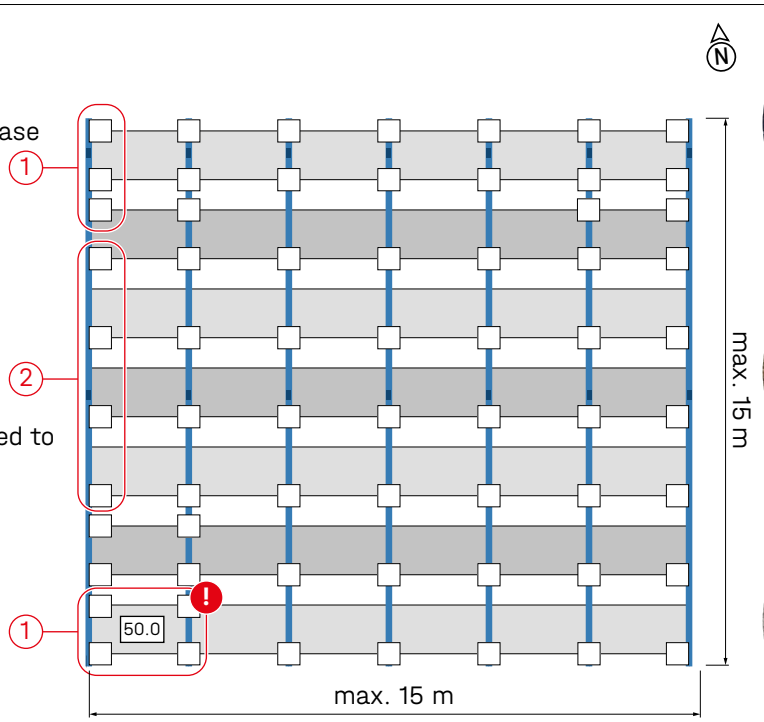

2b Classic LS

Place the PE plates according to the K2 Base installation plan.

! Additional ballast is necessary in some cases!

The gravel fill is applied to the PE plates again.

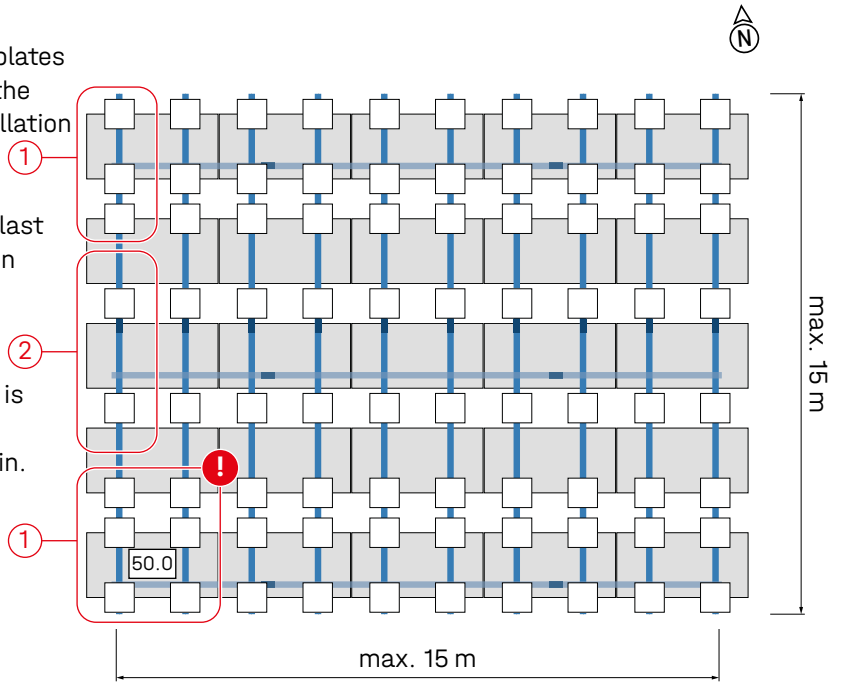

Placement & assembly with walkway slabs

1 **Classic/Classic LS**

A walkway slab is placed under each SD Dome and Peak elevation and fixed with concrete anchors.
Pre-drilling for the concrete anchor is necessary.

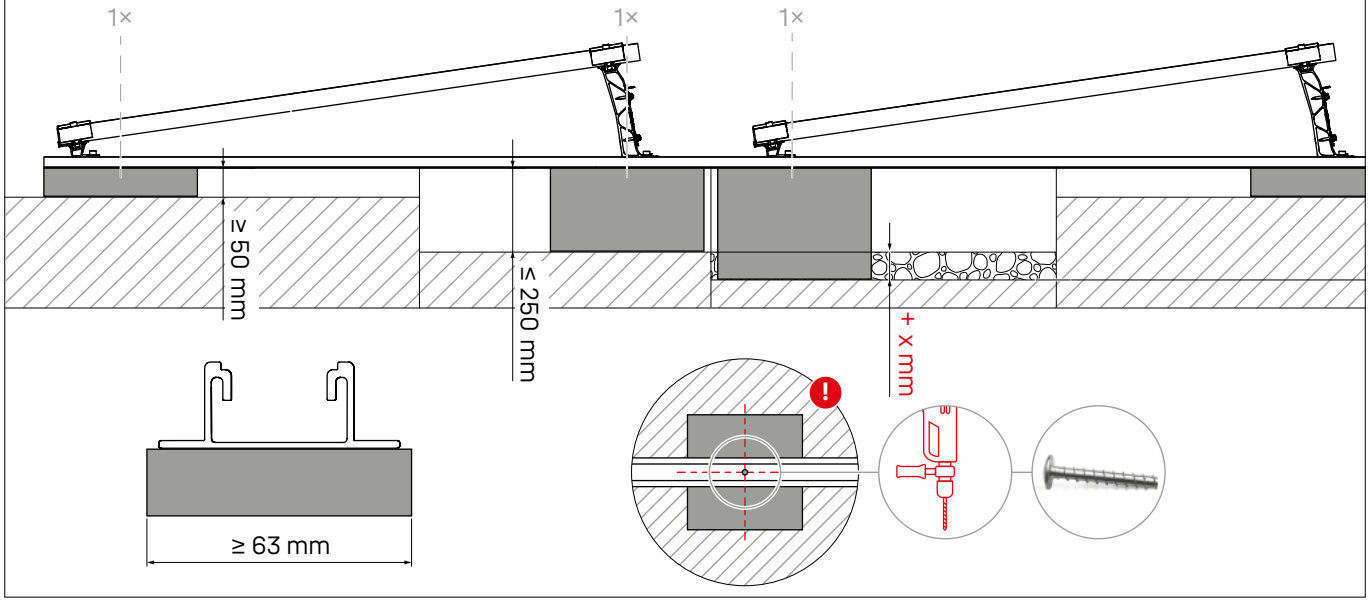

2

! Additional ballast is necessary in some cases!

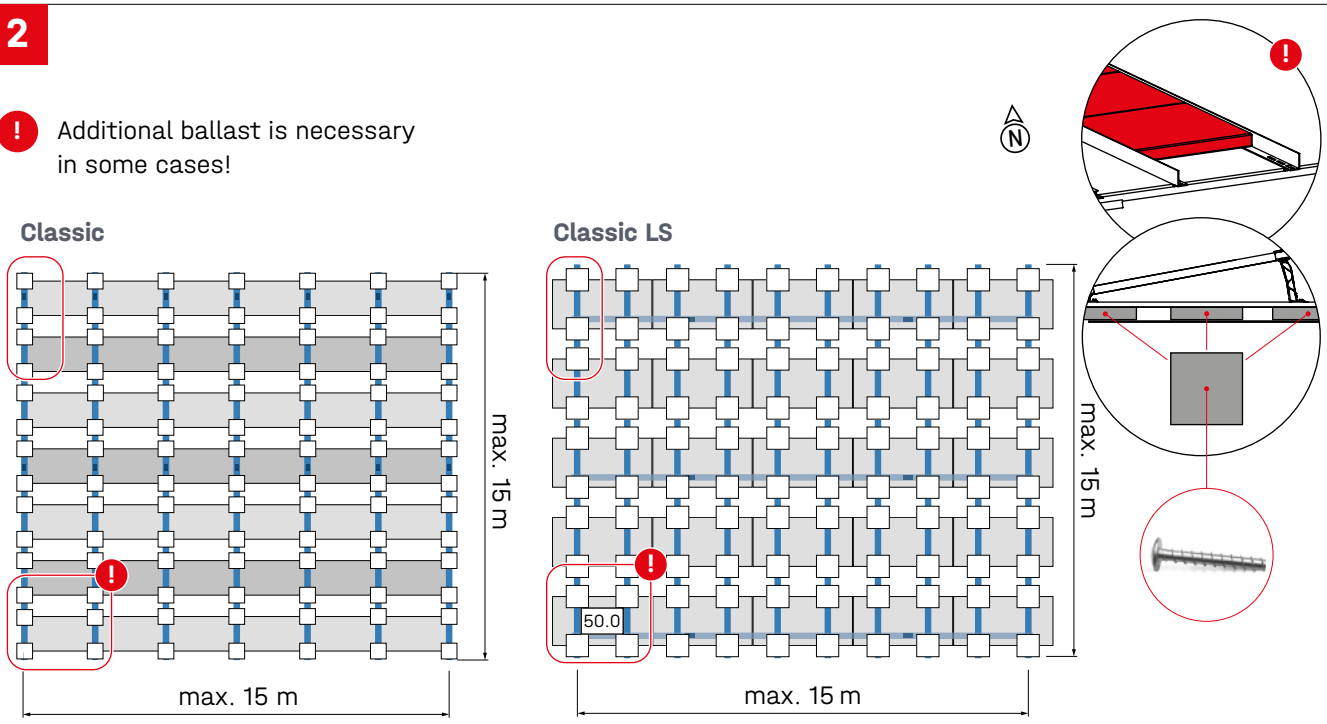

Notes

Notes

Thank you for choosing a K2 mounting system.

Mounting ystems from K2 Systems are quick and easy to install. We hope these instructions have helped. Please contact us with any questions or suggestions for improvement. Our contact data:

- **k2-systems.com/en/contact**
- **Service Hotline: +49 (0)7159 42059-0**

Our General Terms of Business apply. Please refer:
k2-systems.com

K2 Systems GmbH
Haldenstraße 1 · 71272 Renningen · Germany
+49 (0) 7159 - 42059 - 0 · info@k2-systems.com · k2-systems.com

D-/S-Dome 6 Classic/Classic LS PE plates + walkway slabs Assembly EN V1 | 1026 · Subject to change · Product illustrations are exemplary and may differ from the original.